Installation Instructions

SARGENT
ASSA ABLOY

10X Line Cylindrical Lockset

1 Tools Required

- #2 Phillips screwdriver
- Push pin (provided)
- 7/16" drill bit
- 1/8" drill bit
- 5/32" drill bit
- 2-1/8" Bore
- 1" Bore

2 Package Contents

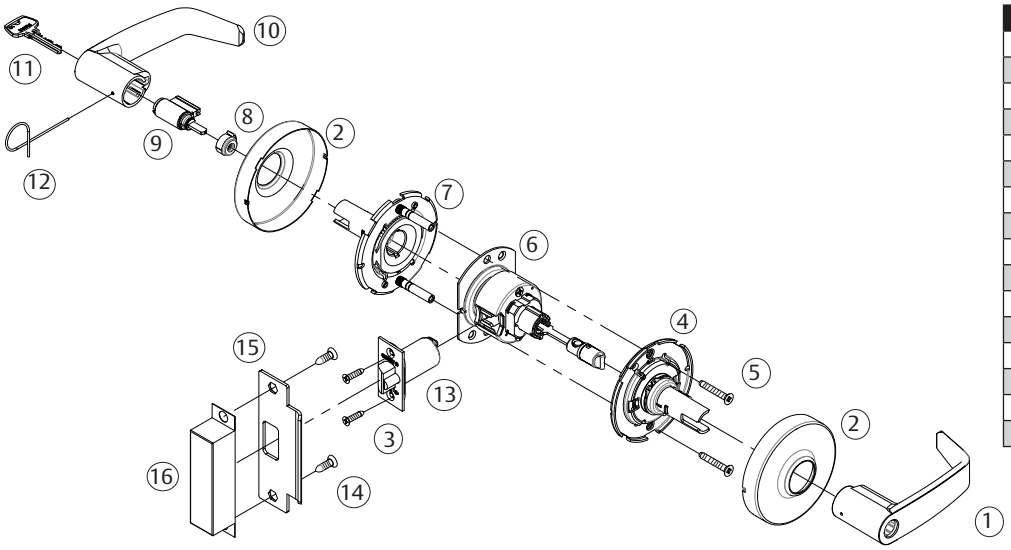

Fig.	Description
1	Inside lever handle
2	Rose/Scalp (2)
3	Screws - latch (2) #8-32 x 3/4"
4	Inside spring housing assembly
5	Screws - through-bolt (2) #10-32 x 1-1/4"
6	Lockbody assembly with mounting plate
7	Outside spring housing assembly
8	Cylinder spacer
9	Cylinder
10	Outside lever handle
11	Key
12	Push pin
13	Latch
14	Screws - strike (2) #12-24 x 3/4"
15	Strike
16	Strike box (Optional)

3 Door Preparation

1. Use template A8290 to mark the door (See Figure 1).
2. Drill the door according to the template.
3. Verify the dimensions (See Figure 2).
4. Install the strike (See Figure 3)

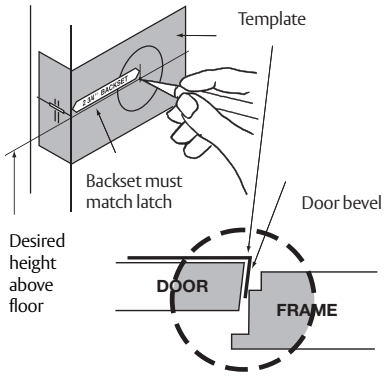

Figure 1

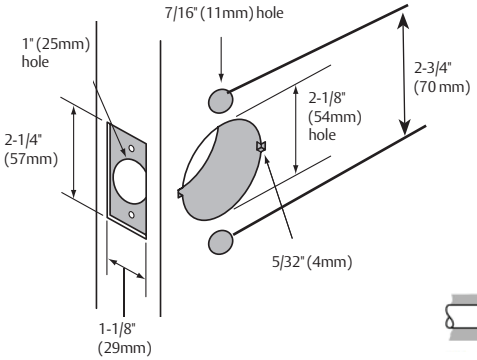

Figure 2

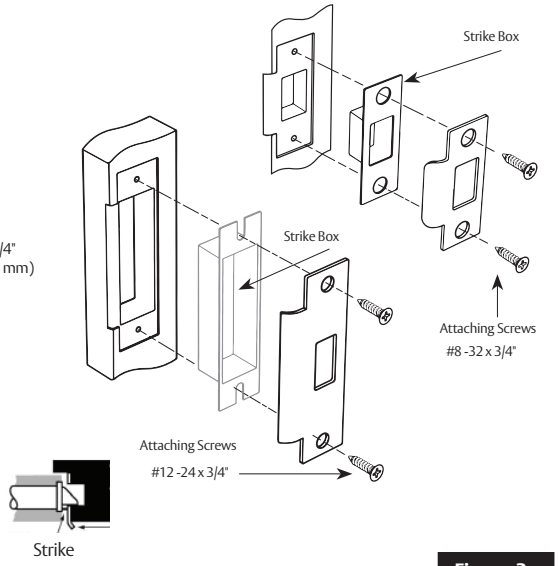

Figure 3

IMPORTANT: Deadlocking latch must stop on strike when door is closed.

IMPORTANT

- The accuracy of door preparation is critical for proper functioning and security of this lever handle lock. Misalignment can cause premature wear and a lessening of security.
- Be sure to verify backset before marking and drilling door.

1-800-727-5477 • www.sargentlock.com

Copyright © 2021 SARGENT Manufacturing Company. All rights reserved. Reproduction in whole or in part without the express written permission of SARGENT Manufacturing Company is prohibited.

A8286 04/21

Experience a safer and more open world

SARGENT
ASSA ABLOY

4 Latch Installation

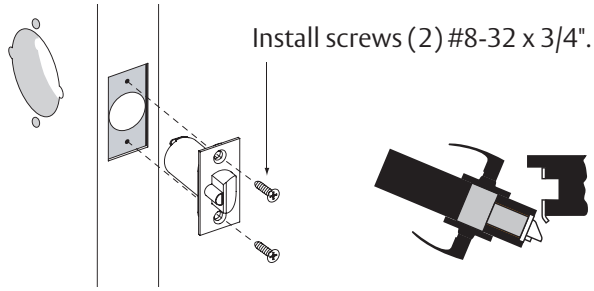

Figure 4

5 Adjust Lock for Door Thickness (if necessary)

Lock is factory preset for 1-3/4" (44mm) doors unless specified. To adjust lock to door thickness if other than 1-3/4" (44mm):

1. Remove trim assembly from the lockbody. (See Figure 5).
2. Rotate mounting plate to adjust for proper door thickness.
   - For 2" thick door the inside face of the mounting plate should be flush with the face of the bearing. (See 5a).
   - Verify correct position from the markings on the through-bolt stud, or by measuring from inside surface of the mounting plate to the centerline of the retractor (See 5b).
3. Reassemble the outside trim assembly to the lockbody.

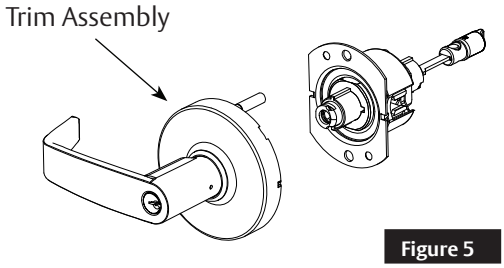

Figure 5

Spin the mounting plate to the left to adjust for larger door thickness.

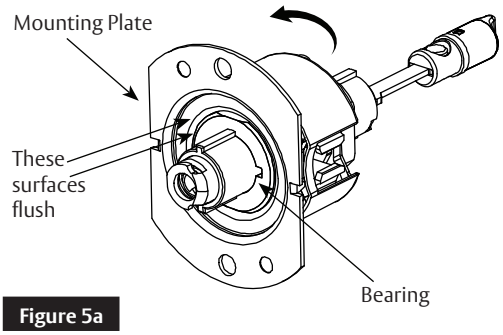

Figure 5a

Door Thickness	Dimension A
1-3/4" (44 mm)	**7/8**" (22 mm)
2" (50 mm)	**1**" (25 mm)
2-1/4" (57 mm)	**1-1/8**" (29 mm)

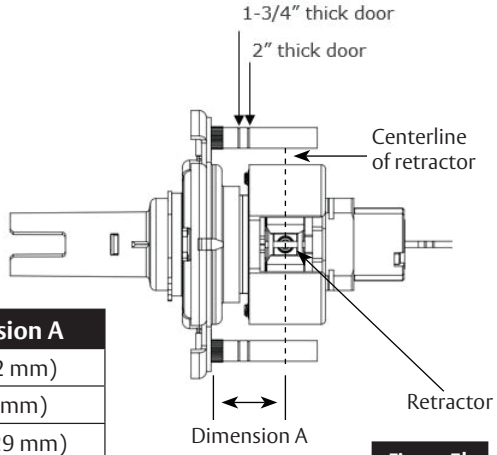

Figure 5b

6 Install Outside Assembly

To adjust lock to door thickness if other than 1-3/4" (44mm) refer to Section 5.

Insert lockbody into door from outside making sure that lockbody hooks latch case and retractor engages bolt tail(s). See Figure 6.

DO NOT FORCE. (If lockbody does not engage latch easily, check door preparation for errors.)

Latch bolt tail should be centered in depth of retractor. If it is not, refer to Section 5 to properly adjust the lock for door thicknesss.

Figure 6

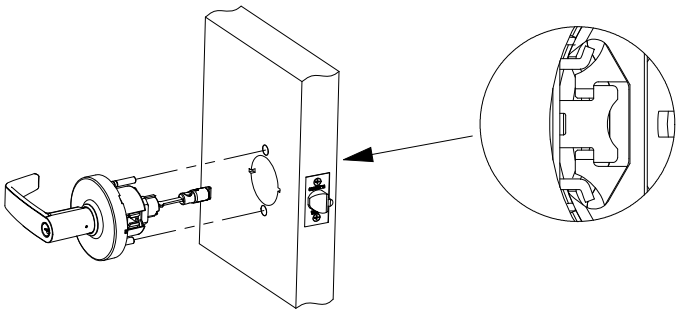

Copyright © 2021 SARGENT Manufacturing Company. All rights reserved. Reproduction in whole or in part without the express written permission of SARGENT Manufacturing Company is prohibited.

SARGENT
ASSA ABLOY

7 Install Inside Components

1. Remove rose from inside spring housing assembly.
2. Align and insert inside spring housing onto the installed lockbody.
3. Install screws to tighten the lock to the door.
4. Orient dimples on the side of the rose horizontally at 3 and 9 o'clock position in line with the openings on the spring housing assembly. See Figure 7.
5. Install rose onto the inside spring housing assembly.
6. In the unlocked position, verify the button is adjusted properly. See Figure 8 for proper alignment. Adjust if necessary.
7. Install inside lever.

Note: Test for proper operation before closing door.

Figure 7

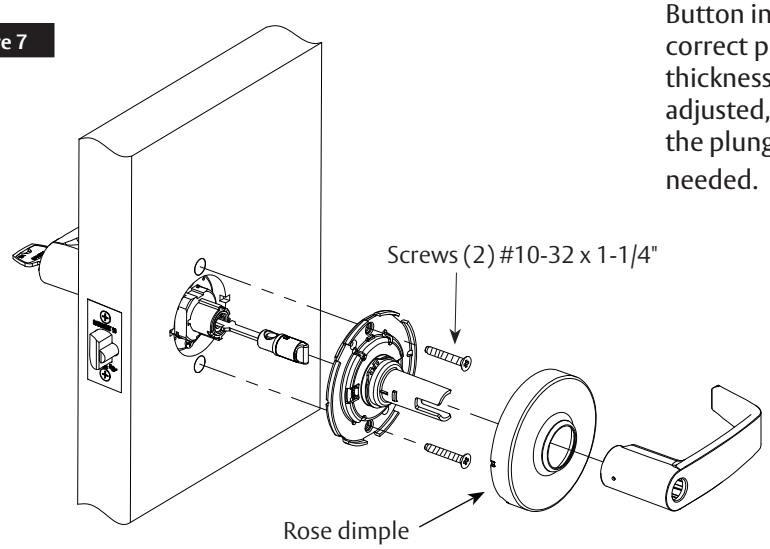

Button in-line with shank indicates correct position based upon door thickness. If the button needs to be adjusted, position it by depressing the plunger, moving it in or out as needed.

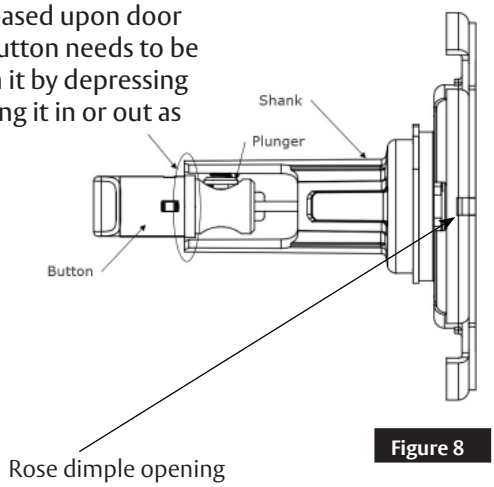

Figure 8

8 Cylinder Installation

a Standard Cylinder (Figure 9)

IMPORTANT
Before installing cylinders:

- Use a flat blade screwdriver to rotate cam until the driver points are in a 6 and 12 o'clock position. See Figure 15 on page 5.

Cylinder spacer should be installed "snapped" on to the cylinder before installing into the outside trim assembly.

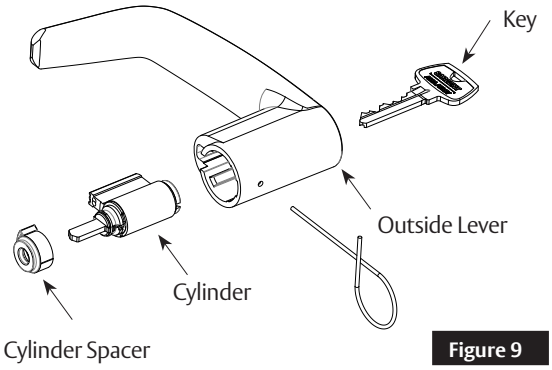

Figure 9

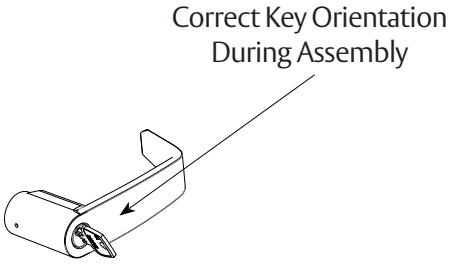

Copyright © 2021 SARGENT Manufacturing Company. All rights reserved. Reproduction in whole or in part without the express written permission of SARGENT Manufacturing Company is prohibited.

SARGENT
ASSA ABLOY

8 Cylinder Installation, continued

b Interchangeable or Removable Core (Figure 10)

- Remove temporary construction core or plastic core. If keyed, use Control Key (stamped "C") rotate 15° and pull.
- Insert permanent core into lever with control key; rotate 15° and remove key.

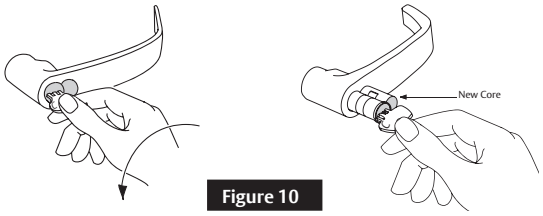

Figure 10

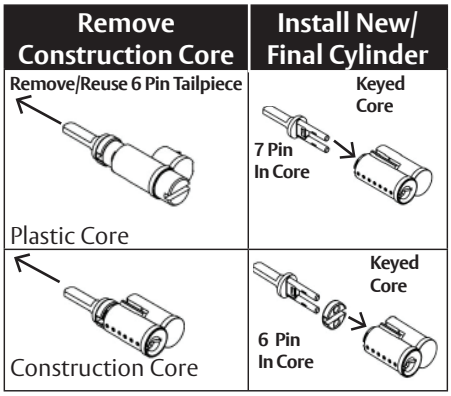

SFIC

IMPORTANT

- Remove tailpiece from construction core and insert into new core. If using 7 pin cores, insert the 7 pin tail piece that's supplied with the lock, before installing the core into the lock.
- For XC LFIC cores, snap-on retainer must be installed onto tailpiece. Tail and retainer assembly will press fit onto back of core.

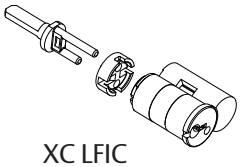

XC LFIC

9 Lever Removal & Installation

a Standard Cylinder (Figure 11)

To Remove:
Rotate key 45° and hold. Depress lever catch with pin tool.

To Install:
With driver points at 6 and 12 (See Figure 15), rotate key 45° in either direction, and then slide the lever on over the lever catch. Confirm the lever will not pull off.

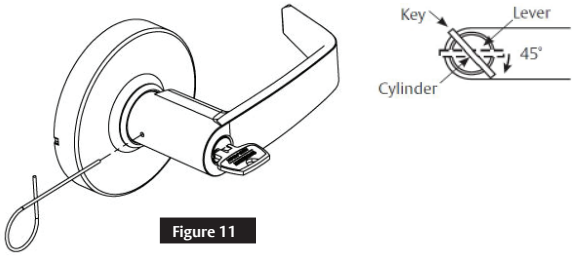

Figure 11

b Interchangable or Removable Core (Figure 12)

To Remove:
Remove core and tailpiece, using control key (stamped "C").

Insert slotted screwdriver or lever release tool into the cylinder opening and make contact with the lever catch.

Pull lever catch horizontally towards the opposite side of the cylinder opening and remove lever.

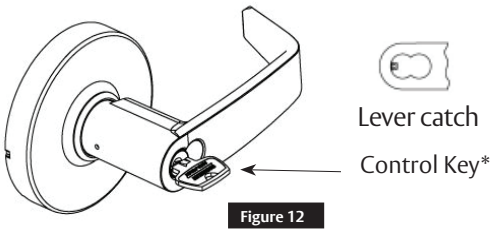

Figure 12

***Note**
For 1-Bitted cylinders, utilize a control key cut 113511.

To Install:
Without the core installed, slide the lever over the lever catch. Confirm the lever will not pull off. Install core and tailpiece, using control key (Stamped "C").

c Plain Lever (Figure 13) & Push/Turn Button (Figure 14)

To Remove:
Depress lever catch with pin tool, remove lever.

To Install:
Slide lever on over the lever catch. Confirm the lever will not pull off.

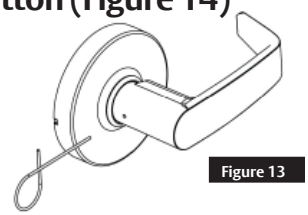

Figure 13

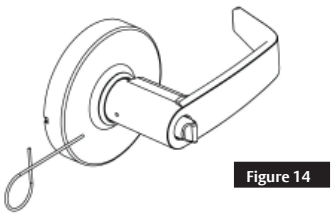

Figure 14

Copyright © 2021 SARGENT Manufacturing Company. All rights reserved. Reproduction in whole or in part without the express written permission of SARGENT Manufacturing Company is prohibited.

SARGENT
ASSA ABLOY

10 Timing 10XG26 & 10XG38

1. Remove outside and inside levers (See Section 9).
2. Adjust cams visible from both the outside and inside lock trim.
   2a. Use a flat blade screwdriver to rotate each cam until the driver points are in a 6 and 12 o'clock position. (See Figure 15)
3. Re-install outside and inside levers.
4. Test both cylinders with key before closing the door.

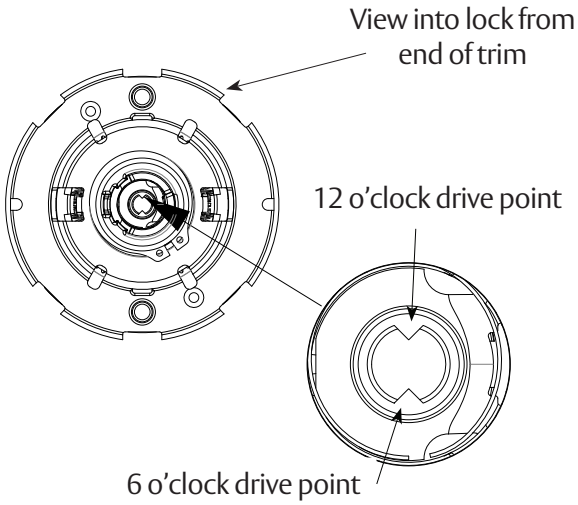

Figure 15

11 Other Instructions

a Remove Outside Lever for Exit Latch 10XG13

1. Remove inside lever (See Section 9).
2. Remove rose.
3. Remove (2) mounting screws and inside housing assembly. See Figure 16.
4. Remove outside trim assembly.
5. Push and hold plug back (located inside of outside trim assembly). See Figure 17.
6. Push lever catch with push pin and remove lever.

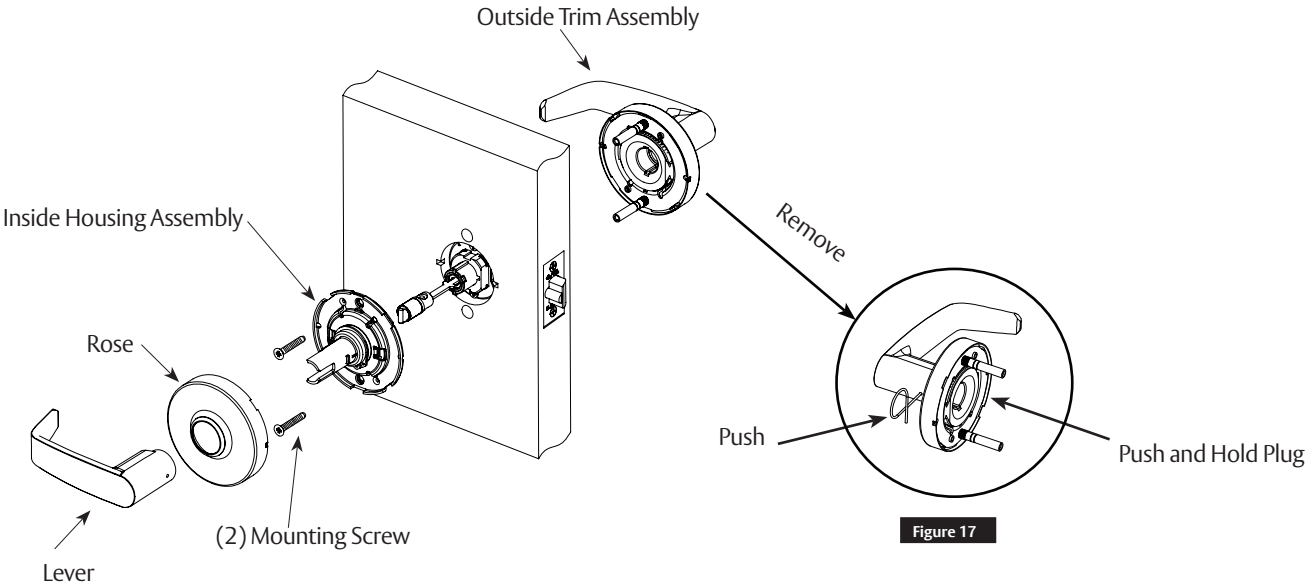

Figure 16

Figure 17

Copyright © 2021 SARGENT Manufacturing Company. All rights reserved. Reproduction in whole or in part without the express written permission of SARGENT Manufacturing Company is prohibited.

SARGENT
ASSA ABLOY

11 Other Function Instructions, continued

b Install Single Lever Pull 10XU93

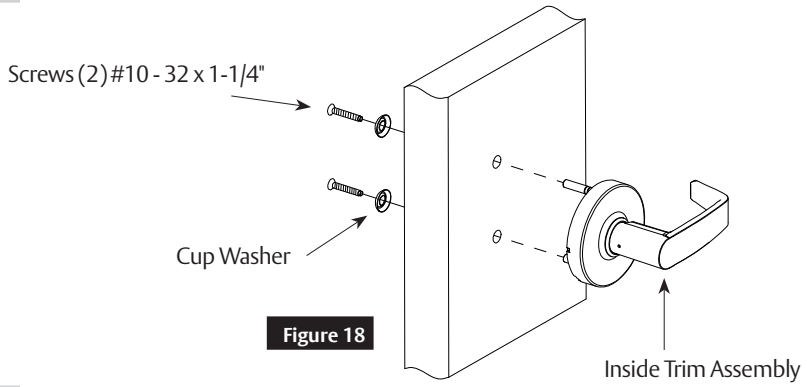

Figure 18

c Install Double Lever Pull (10XU94/ 10XU94-2)

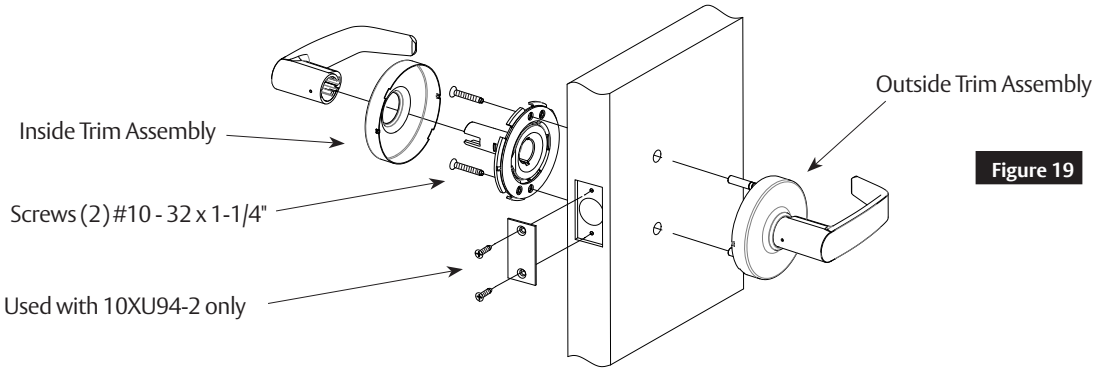

Figure 19

12 Miscellaneous Options

a 1-3/8" Doors (1- Option)

Install (1) adapter plate between the door and rose assemblies (both sides).

- Inside trim to be aligned with holes marked screw slot.
- Outside trim through-bolts to be aligned with through-bolt holes marked on adapter plate.

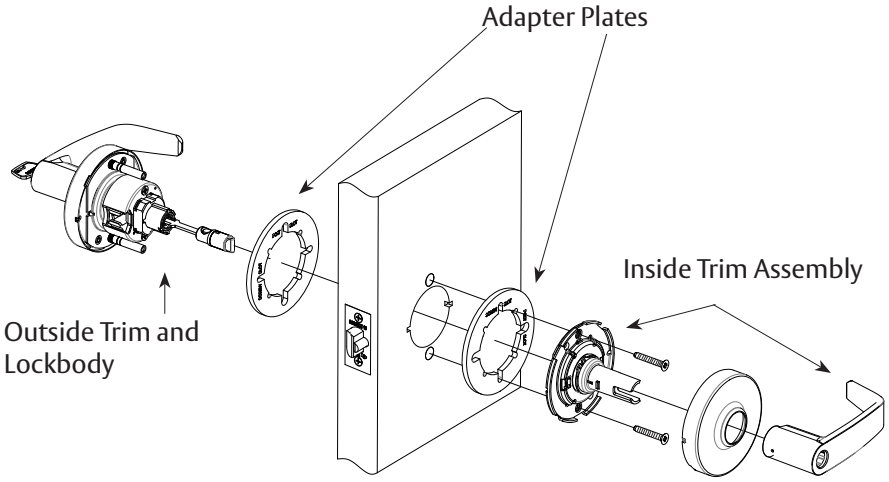

Copyright © 2021 SARGENT Manufacturing Company. All rights reserved. Reproduction in whole or in part without the express written permission of SARGENT Manufacturing Company is prohibited.

SARGENT
ASSA ABLOY

12 Miscellaneous Options

b Lever to Accept Schlage® LFIC (SF- Option)

1. Provided less core.
2. Tailpiece included with lock.
3. Attach tailpiece to Schlage® LFIC and insert into the lever.

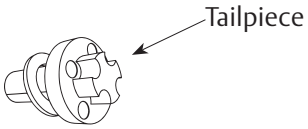

c Lever to Accept Schlage® or Yale® Fixed Core Cylinder (30- or YC- Option)

1. Provided less core.
2. Depress cap pin and unscrew end cap to remove tailpiece from competitor cylinder.
3. Insert new tailpiece, in orientation shown.
4. Re-assemble end cap over new tailpiece.

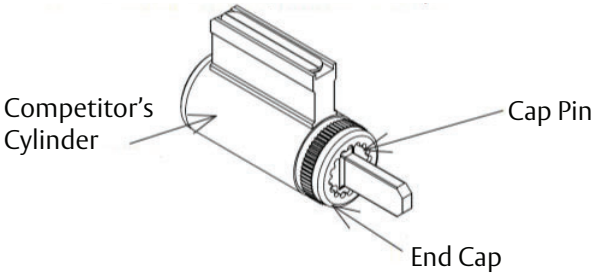

d Lever to Accept Yale® LFIC (YRC- Option)

1. Provided less core.
2. Slide provided spacer over tailpiece

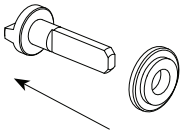

3. Insert driver assembly into back of core.

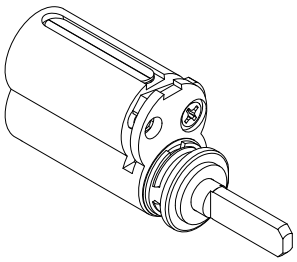

Copyright © 2021 SARGENT Manufacturing Company. All rights reserved. Reproduction in whole or in part without the express written permission of SARGENT Manufacturing Company is prohibited.

The ASSA ABLOY Group is the global leader in access solutions. Every day, we help billions of people experience a more open world.

ASSA ABLOY Opening Solutions leads the development within door openings and products for access solutions in homes, businesses and institutions. Our offering includes doors, door and window hardware, locks, access control and service.

SARGENT
ASSA ABLOY

12 Miscellaneous Options

e 10XG50 Hotel Function Adjustment - To adjust timing of hotel cylinder key lockout indicator

1. Remove lever, cylinder and spacer from assembly.
2. Insert adjustment tool (provided with lock) into interior cap as shown below.

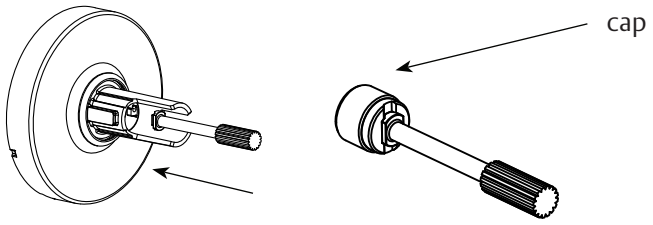

3. Rotate cap clockwise until fully tight.

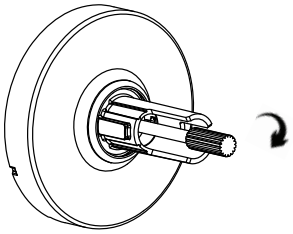

4. Rotate back counter-clockwise until tool handle is approximately in line with the end of the shank (as shown) AND cap slot orientation is vertical. Slot alignment may require a slight rotation in either direction.

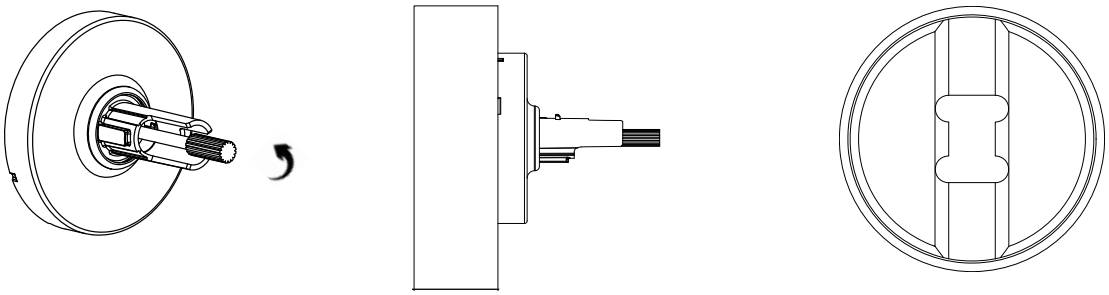

5. Remove adjustment tool and re-install cylinder and lever. Lever install will require key be rotated 90° counter-clockwise.

⚠ WARNING

This product can expose you to lead which is known to the state of California to cause cancer and birth defects or other reproductive harm. For more information go to www.P65warnings.ca.gov.

Copyright © 2021 SARGENT Manufacturing Company. All rights reserved. Reproduction in whole or in part without the express written permission of SARGENT Manufacturing Company is prohibited.

Experience a safer and more open world